SERVICE DRAWING NUMBER	3rd ANGLE PROJECTION	THIS DRAWING IS MESL MICROWAVE PROPERTY IT MAY NOT BE COPIED OR EXHIBITED WITHOUT WRITTEN PERMISSION	MESL MICROWAVE
SECURITY CLASSIFICATION	DRAWING TO BE READ IN CONJUNCTION WITH BS 8888		

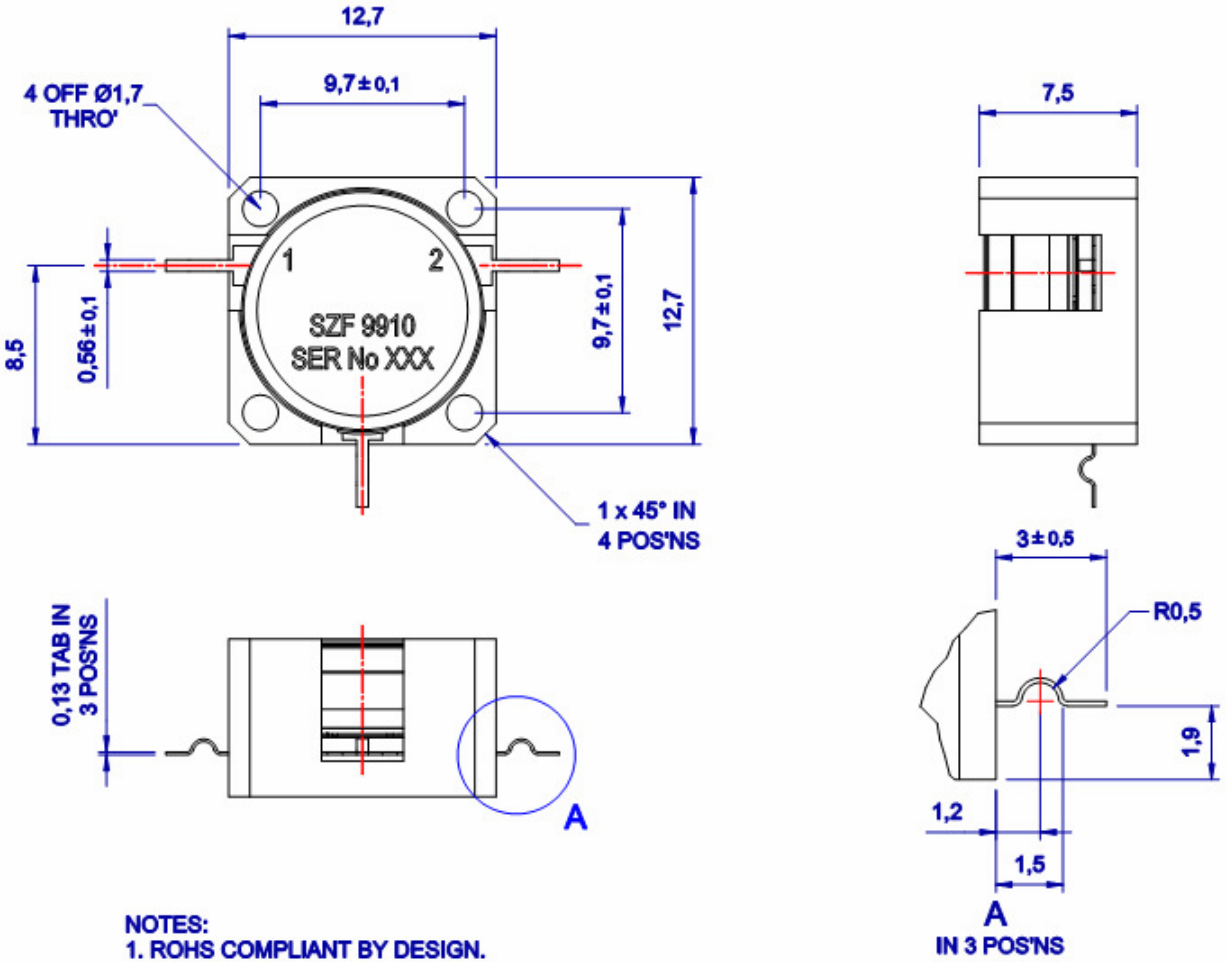

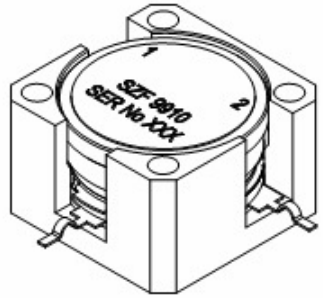

ELECTRICAL SPECIFICATION:

FREQUENCY RANGE: 2010 - 2025MHz
POWER HANDLING PEAK: 100 Watts
POWER HANDLING AVERAGE: 10 Watts
OPERATING TEMP RANGE: -40 to +85°C
STORAGE TEMP. RANGE: -40 to +100°C.
IMD: -70dBc Max. Over the operating temperature range 2x3W for Tones spacing from 3MHz to 6MHz, 1MHz step.
INSERTION LOSS: 0.25dBc Max. Over the operating temperature range and at 10 Watts.

RETURN LOSS at all port:	23dB Min.	15C to 35°c
	20dB Min.	-40 to +85°C
ISOLATION:	23dB Min	15C to 35°C
	20dB Min	+40 to +85°C
INSERTION LOSS:	0.1dB Max peak to peak	15C to 35°C
FLATNESS	0.2dB Max peak to peak	-40 to +85°C

NOTES:
1. ROHS COMPLIANT BY DESIGN.

REF	DESCRIPTION	No OFF	CHAR.	POS.TOL.	ISSUE	DATE	MOD NUMBER
					F	03.07.07	DRN 9910

RED (Development Only) — A 3

LIGHTLY REMOVE ALL BURRS AND SHARP EDGES U.O.S.

Q.A. DATE	ORIGINAL SCALE 4:1 DO NOT SCALE PRINT	MATERIAL	SPECIFICATION	GENERAL TOLERANCE UNLESS OTHERWISE STATED ISO 2768-fH Symmetry ± 0,05	CONTRACTOR MESL MICROWAVE
PROD.REL. DATE	DIMENSION IN mm				RESPONSIBLE AUTHORITY
ENG.APP. DATE		FINISH	SPECIFICATION	FINISH TO BE 1.6 UNLESS OTHERWISE STATED	TITLE 2GHz PACKAGE DROP-IN TYPE SZF 9910
MECH. ENG. DATE	CERTIFIED AT ISSUE				
DRAWN S.W. DATE					

SECURITY CLASSIFICATION

CONTRACTORS DRAWING NUMBER 9910-000-OL

SERVICE DRAWING NUMBER

SHEET No 1 OFF 1